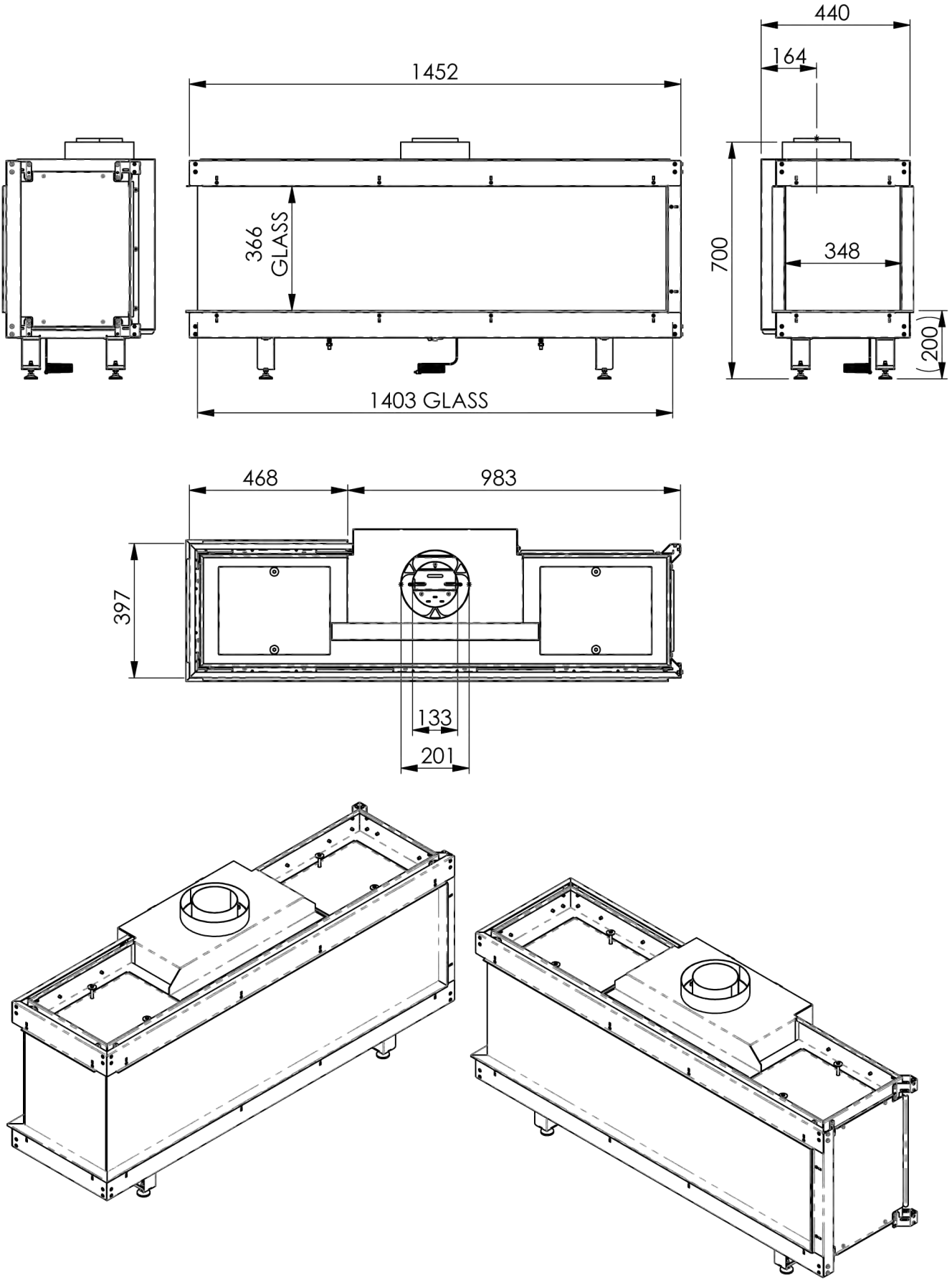
440
164
1452
366
GLASS
700
348
(200)
1403 GLASS
468
983
397
133
201